SCHEMA PRATICO / FUNCTIONAL DIAGRAM

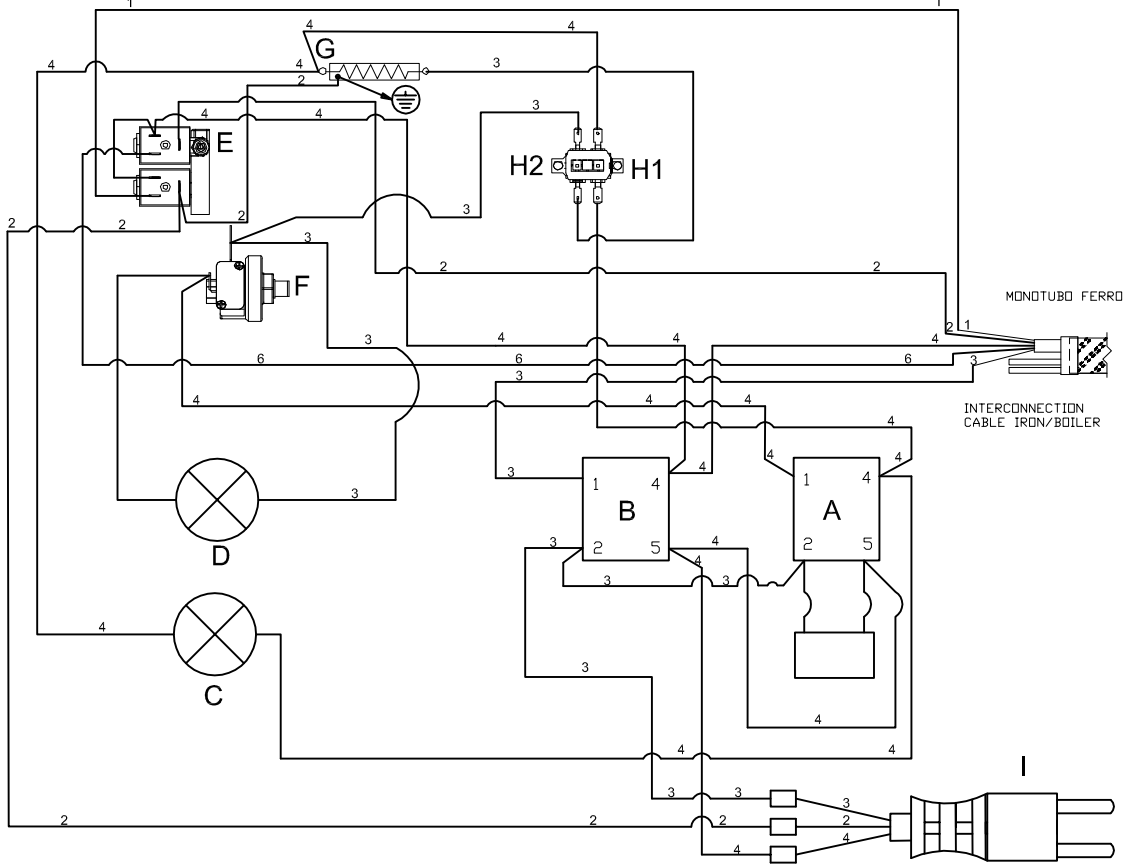

LIST / LEGENDA	
A-BOILER SWITCH	A-INTERRUTTORE CALDAIA
B- IRON SWITCH	B- INTERRUTTORE FERRO
C-WATER END WARNING LIGHT	C-SPIA FINE ACQUA
D-STEAM READY WARNING LIGHT	D-SPIA PRONTO VAPORE
E-SOLENOID VALVE	E-ELETTROVALVOLA
F-PRESSURE SWITCH	F-PRESSOSTATO
G-BOILER HEATING ELEMENT	G-RESISTENZA CALDAIA
H1-THERMOSTAT 200°	H1-TERMOSTATO
H2-THERMOFUSE 318°	H2-TERMOFUSIBILE
I- FEEDING CABLE	I- CAVO ALIMENTAZIONE
R1- SOLENOIDVALVE ACTIVATION SWITCH 1	R1-PULSANTE ELETTROVALVOLA 1
R2- SOLENOIDVALVE ACTIVATION SWITCH 2	R2- PULSANTE ELETTROVALVOLA 2
S-IRON THERMOSTAT	S-TERMOSTATO FERRO
T - IRON HEATING ELEMENT	T - RESISTENZA FERRO
U- SPIA FERRO	U- SPIA FERRO
1-WHITE	1-GRIGGIO
2-YELLOW/GREEN	2-GIALLO/VERDE
3-BLUE	3-BLU
4-BROWN	4-MARRONE
5-RED	5-ROSSO
6-BLACK	6-NERO

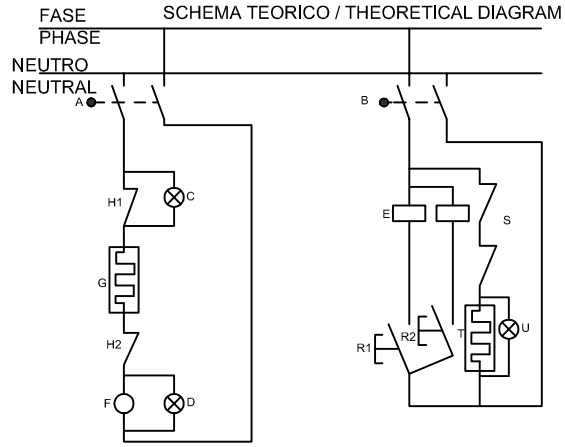

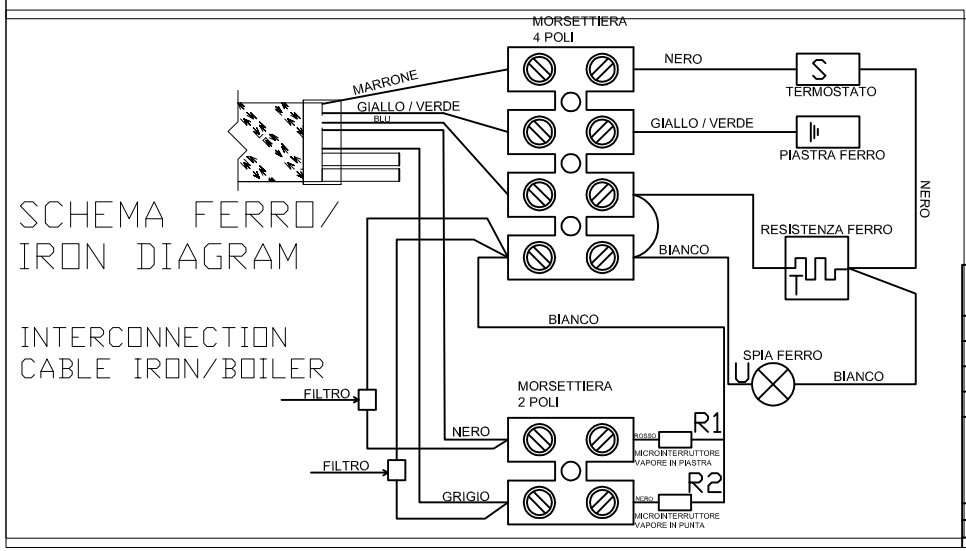

CRITICAL DIMENSION MUST BE VERIFIED = XXX	For all dimentions without any tolerance indication refer to UNI 5307-medium precision level	ROUGHNESS	SCALE:
			SHEET:
MATERIAL:	VOLUME (dm3)	MODEL CMM057	REPLACES:
TREATMENT:			DERIVED FROM:
SPECIFICATIONS:	DRN/CKD IVAN	TITLE SCHEMA ELETTRICO / ELECTRIC DIAGRAM	
NOTES:	APPROVED		
	DATE 19.09.2013	NUMBER CMM057 couture 1200	

I particolari descritti nel disegno non devono contenere nessuna sostanza pericolosa in accordo alla direttiva EU/2002/95/EC (Piombo,Mercurio,Cadmio,Cromo Esavalente,PBB e PBDE)

Items shown in this drawing must not contain any hazardous substances according to EU directive 2002/95/EC (Lead,Cadmium,Mercury,hexavalent Chromium, flame retardantsPBB and PBDE)

This drawing is property of MAC 5 LTD without whose permission it may not be copied, shown or handed to a third party or otherwise used.